minusco® Glass Oriented Network

8664P STRIQE

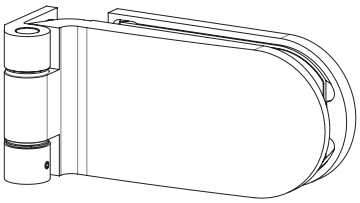

10mm
12mm

900mm

MAX 55kg

- Cerniera laterale tonda per profilo P30W.
- Bisagra lateral redonda para perfil P30W.
- Round side hinge for P30W profile.
- Seitliches Band in Rundform passend zu Profil P30W.

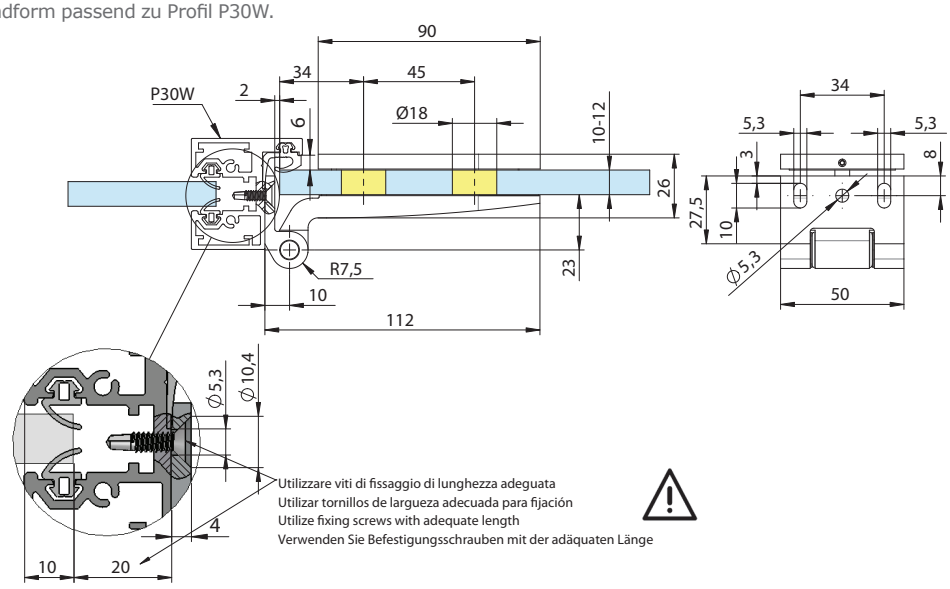

8665P STRIQE

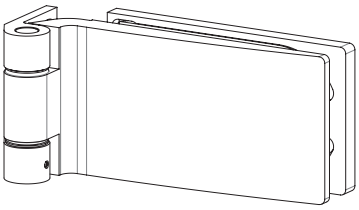

10mm
12mm

900mm

MAX 55kg

- Cerniera laterale per profilo P30W.
- Bisagra lateral para perfil P30W.
- Round side hinge for P30W profile.
- Seitliches Band in Eckform passend zu ProfilP30W.

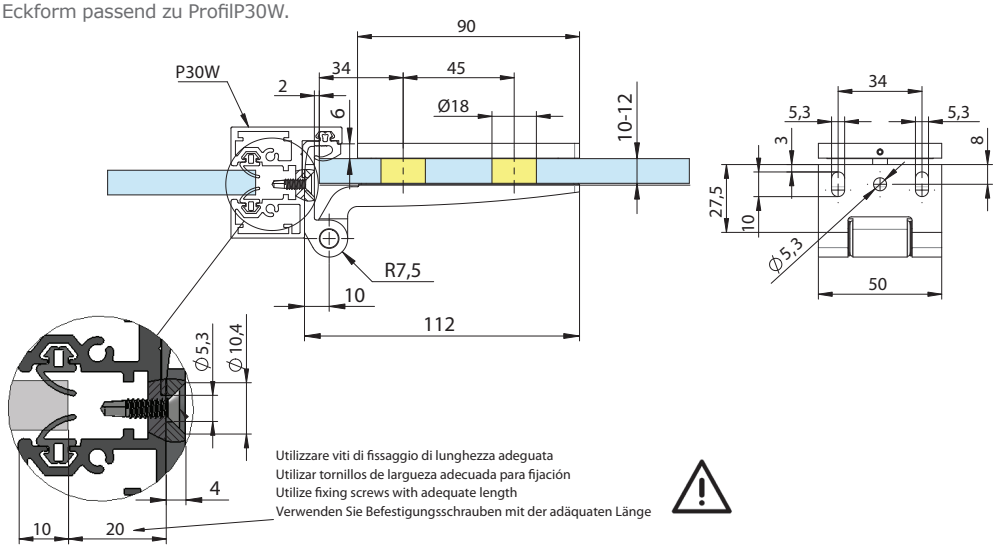

MINUSCO - Italy - tel.+39.030.2532008 - +39.030.2530289 - fax.+39.030.2534707 - info@minusco.com - www.minusco.com
copyright © 2016 colcomgroup - Tutti i diritti riservati

C14.4